Build up your trust

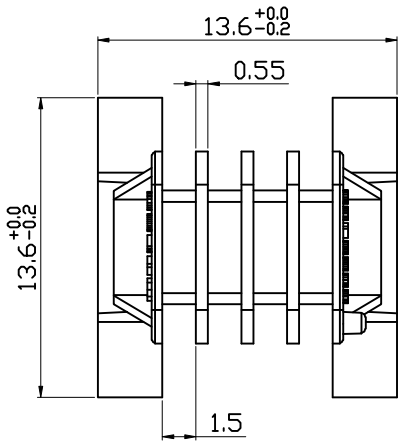

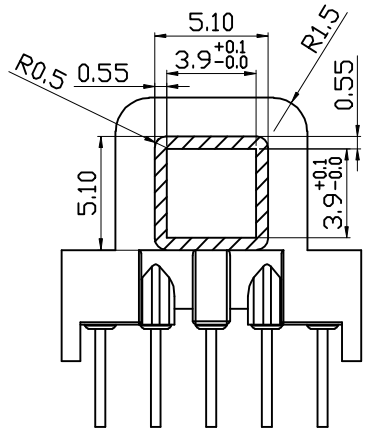

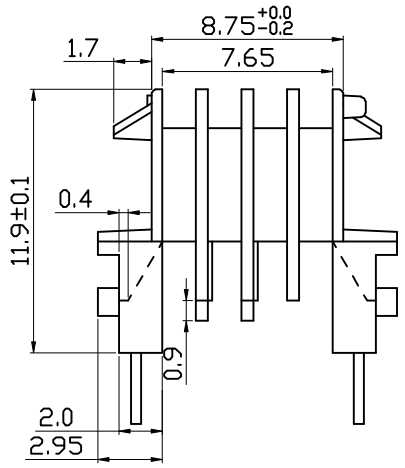

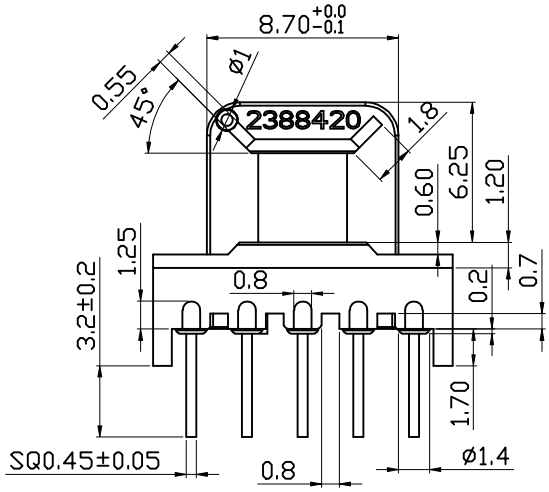

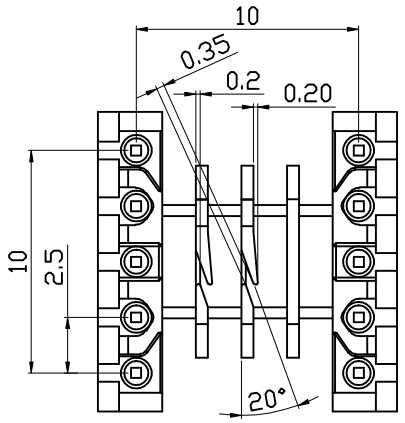

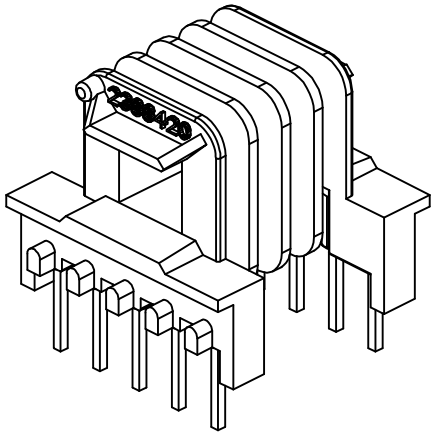

TITLE: BOBBIN EE-13 10PIN	TOLERANCES	BOBBIN MATERIAL: PET FR530	UL REC. UL 94V-0
DRAWING NO: GS-1311	0<L≤1 ±0.08; 1<L≤3 ±0.09; 3<L≤6 ±0.10; 6<L≤10 ±0.11; 10<L≤15 ±0.13; 15<L≤22 ±0.15; 22<L≤30 ±0.17; 30<L≤40 ±0.20; 40<L≤53 ±0.24; Angle: ±1° — PIN PITCH ±0.2	PIN MATERIAL: CP WIRE	PIN TENSION LOAD: 1.0KG MIN
GEMSTONE 建信電子制品有限公司 GEMSTONE ELECTRONIC PRODUCTS CO., LTD.	UNIT: MM / SCALE: 3/1	ANGLE: ±1° / DATE: 2010/12/15	REV: A0
ADD:廣東省東莞市石排鎮石崇大道 TEL:(0769)86514918, 86514919 FAX:86514878	DRAWED: XU ZHAN	CHECK: DAVID	APPROVED:

REV.	PORTION.	BEFORE REV.	AFTER REV.