Build up your trust

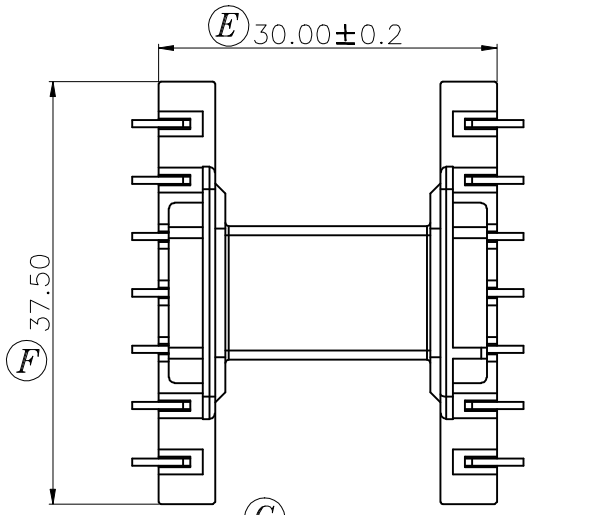

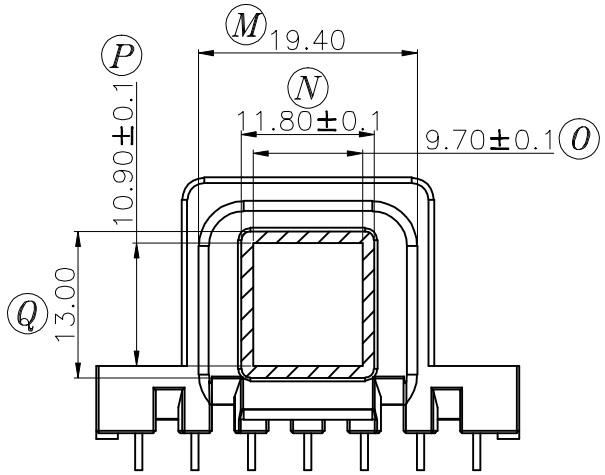

A-A

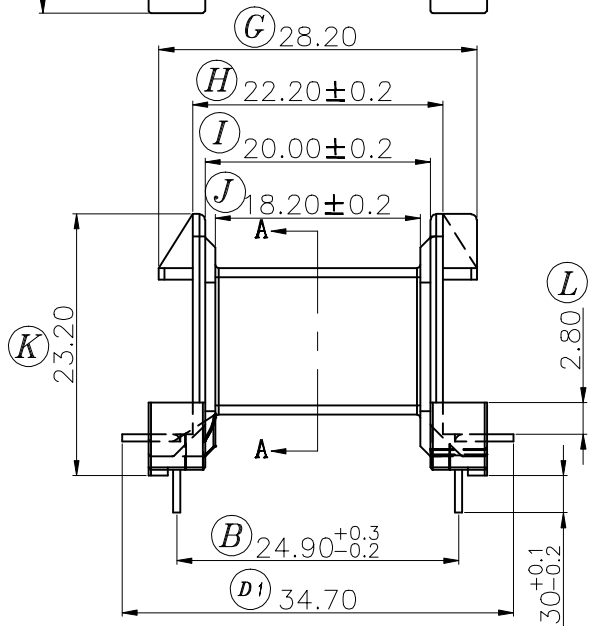

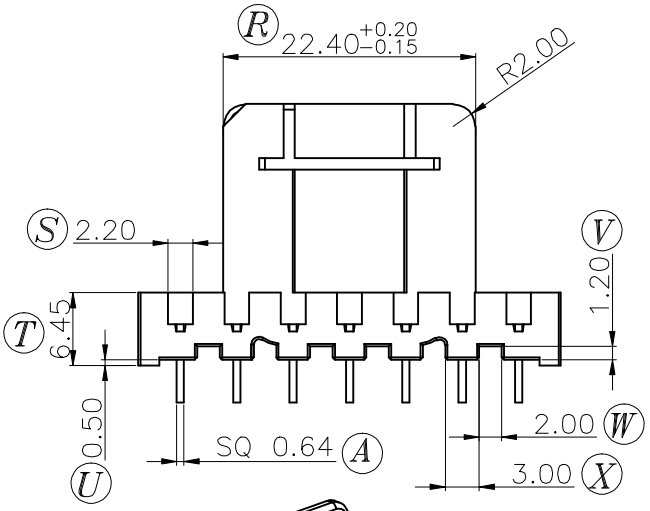

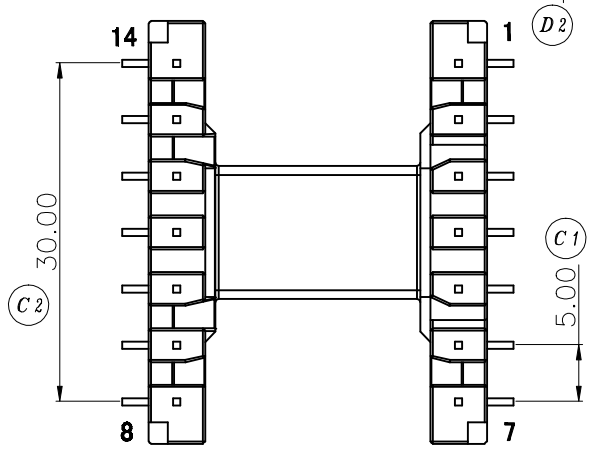

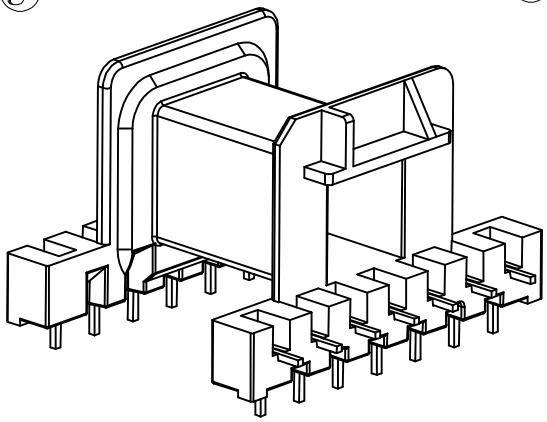

52GTR6120001 PIN 9,11,13 NO

TITLE: BOBBIN EF-32 14PIN	TOLERANCES	BOBBIN MATERIAL: PET FR530(BK)		UL REC. UL 94V-0
DRAWING NO: GS-3205	0<L≦4 ±0.1 4<L≦16±0.2 16<L≦63±0.3 / PIN PITCH ±0.2	PIN MATERIAL: CP WIER		PIN TENSION LOAD: 2.0kg MIN
GEMSTONE 建信電子制品有限公司 GEMSTONE ELECTRONIC PRODUCTS CO.,LTD.	UNIT: MM / SCALE: 1/1	ANGLE: ±1°	DATE: 2013/10/19	REV: A0
ADD:廣東省東莞市石排鎮石崇大道 TEL:(0769)86514918,86514919 FAX:86514878	DRAWED: YTH	CHECK: XU ZHAN		APPROVED:

REV.	PORTION.	BEFORE REV.	AFTER REV.